DRAWING

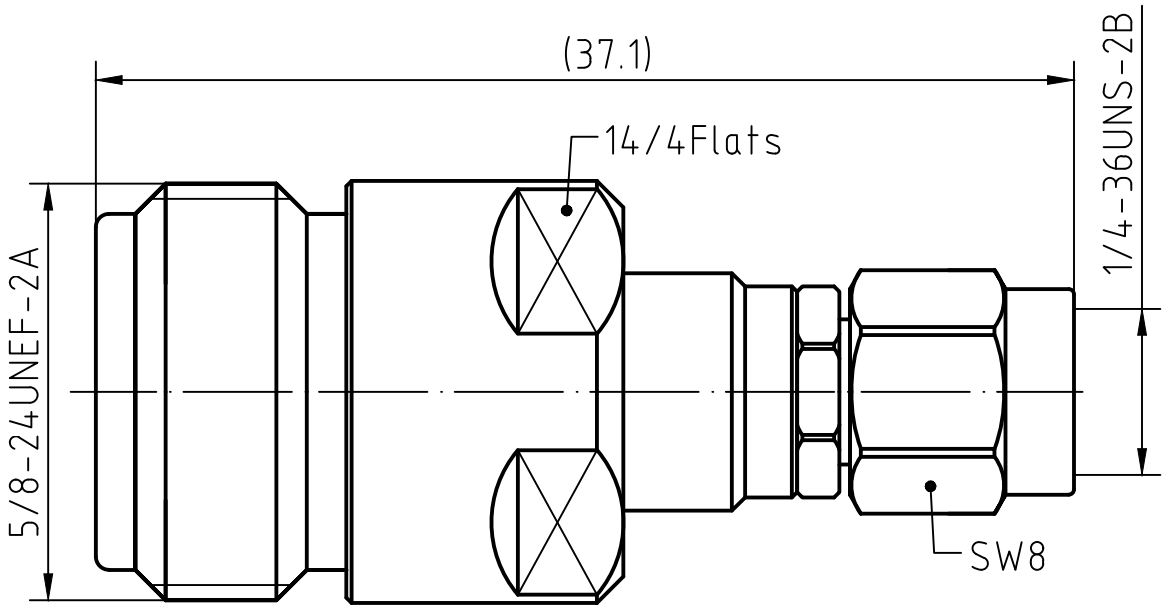

3	1	Body	Stainless steel/Passivated	
2	1	Insulator	PEI	
1	1	Center contact	Beryllium copper/Gold plated	Gold 0.5um over Nickel 2.0um
Itemref	Quantity	Title/Name, designation, material, dimension etc		Article No./Reference

Designed by	Checked by	Approved by - date	File name N/3.5-KJG	Date	Scale 5 : 1

Amitron Electronics, Ltd.

N/3.5-KJG

https://amel.ru

Edition 1.0

Sheet 1/1

CHARACTERISTICS

DESCRIPTION:	ADAPTOR N JACK TO 3.5 PLUG

Electrical data:

Impedance:	*50 Ω*	
Frequency range:	*DC to 18.0 GHz*	
VSWR:	*≤1.10:1*	
Insertion loss:	*≤0.25dB*	
Insulation resistance:	*≥5000MΩ*	
Test voltage:	*750 V rms*	
Working voltage:	*480 V rms*	
Contact resistance:		
1). Centre contact:	*1.00 mΩ N side*	*3.0 mΩ SMA side*
2). Outer conductor:	*0.25 mΩ N side*	*2.0 mΩ SMA side*

Environmental data:

Temperature rating:	*-65 ° C to +165 ° C*
2011/65/EU(ROHS 2.0):	*Compliant*

Mechanical data:

Mating cycles:	*≥500*
Center contact captivation:	*≥15 N(axial)*
Coupling test torque:	*≤1.7 Nm*
Recommended torque:	*0.70 Nm to 1.1 Nm*

Suitable cables:

N/A